ASTROPHYSICS™

TOMORROW'S TECHNOLOGY FOR TODAY'S SECURITY

XIS-5335

Superior Compact Screening

Checkpoint Security: Mail and Small Parcel Inspection

TRANSPORTATION

Airport entrances and perimeters, air cargo, and checkpoint technology.

PORTS & BORDERS

Border control, sea ports, and other large cargo sectors.

CRITICAL INFRASTRUCTURE

Access control for prisons, courthouses, mailrooms, hotel entrances and military bases.

The XIS-5335 is a compact X-Ray Inspection System with tunnel dimensions 53.3 cm x 35.4 cm (21.0" x 14.0"). The XIS-5335 is the smallest system in the XIS series and is designed for screening objects ranging from mailroom parcels to purses and backpacks.

The XIS-5335 has been installed at various checkpoint locations including government buildings, private hotels, and corporate mailrooms. Mounted on a compact frame with heavy duty roller casters, the XIS-5335 can be easily relocated to any site in need of an immediate screening solution.

The XIS-5335 offers the best in compact checkpoint security: quality, low cost ownership, flexibility and performance.

All Astrophysics X-ray Inspection Systems are equipped with Real-Time Diagnostics, a unique Astrophysics feature which allows users to monitor system health. This software was specifically engineered to save you valuable time and money. If requested, Astrophysics would also be able to connect to your system and troubleshoot any issues remotely.

An exclusive Astrophysics option is our 6 Color Imaging, which enables operators to view screened objects in 6 colors, each color correlating to a specific range of Atomic Z-Numbers. 6 Color Imaging enables operators to achieve optimal material identification which improves throughputs.

Astrophysics is committed to providing quality products and services nationwide. We listen to our customers and offer customizations and order flexibility based on their needs.

Backed by a team of engineers from our City of Industry, California center of excellence headquarters, Astrophysics designs cutting-edge X-ray screening technology for detecting weapons and contraband for transportation, ports, borders, critical infrastructure and other industries that present security risks.

Astrophysics is headquartered in the United States and maintains a global presence with service delivery worldwide. Astrophysics is committed to global safety and is proud to present this new age of screening security—driving the industry into the technology of tomorrow.

XIS-5335

GENERAL SPECIFICATIONS

• Tunnel Opening:	53.3 cm x 35.4 cm
(W x H)	21.0" x 14.0"
• Dimensions[2]:	132.0 cm x 76.2 cm x 123.0 cm
(L x W x H)	52.0" x 30.0" x 48.4"
• Shipping Dimensions[2]:	147.3 cm x 89.0 cm x 151.0 cm
(L x W x H)	58.0" x 35.0" x 59.4"
• Net Weight[2]:	285 kg (625 lbs)
• Shipping Weight[2]:	400 kg (885 lbs)
• Conveyor Speed:	23 cm/s (45 ft/min) Forward or Reverse
• Conveyor Height:	73.0 cm (29.0") from Floor
• Conveyor Capacity:	165 kg (360 lbs) Evenly Distributed Load

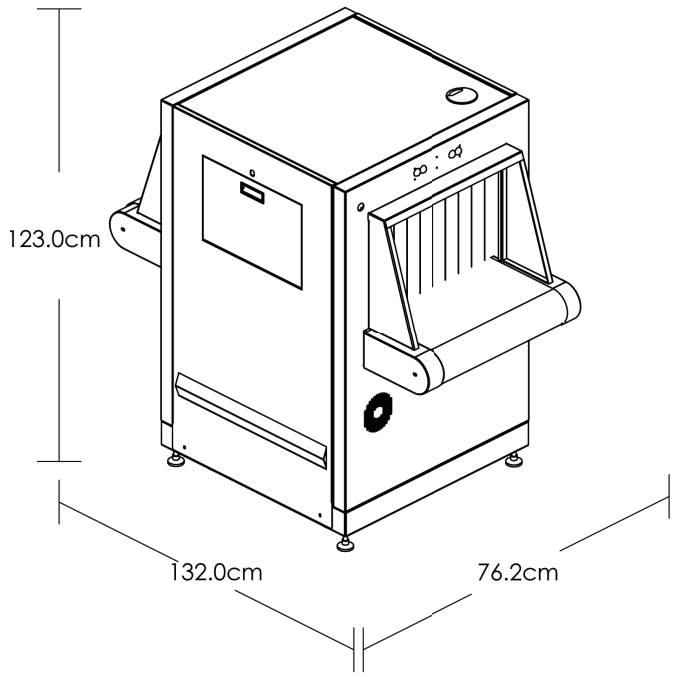

TECHNICAL

• Sensitivity:	40 AWG Typical, 38 AWG Standard
• Spatial Resolution:	1.0 mm Horizontal, 1.0 mm Vertical
• Steel Penetration[1]:	12 mm Typical, 10 mm Standard
• Contrast Sensitivity:	24 Visible Levels, 4096 Gray Level
• Film Safety:	Guaranteed up to ISO 1600 (33 DIN)

X-RAY GENERATOR

• Voltage:	90kV, Operating at 84kV
• Tube Current:	0.6 mA
• Cooling:	Sealed Di-Electric Oil Bath with Forced Air
• Duty Cycle:	100%, No Warm-Up Procedure Required
• Beam Direction:	Diagonally Upward
• Detector:	1024 Channels in an L-Shaped Array

COMPUTER

• Processor:	Intel® Core i5
• Memory:	4 GB RAM
• Storage:	500 GB HDD, 120 GB SSD
• Video Card:	1 GB Video Card
• Platform:	Windows® OS
• Backup:	Uninterruptible Power Supply (Computer Operation- 20min)

VIDEO

• Display Type:	Single 19" LCD Color Monitor
• Display Resolution:	1280 x 1024; 24 Bit/Pixel Color

ENVIRONMENTAL

• Operating Temperature:	0°C - 40°C \ 32°F - 104°F
• Storage Temperature:	-20°C - 60°C \ -4°F - 140°F
• Humidity:	Up To 95% Non-Condensing

ELECTRICAL

• Power Requirements:	110VAC ± 10%, 50/60Hz, 15 Amp Max 220VAC ± 10%, 50/60Hz, 10 Amp Max

HEALTH AND SAFETY

- Compliant with USFDA, Center for Devices and Radiation Health Standards for Cabinet X-Ray Systems (21-CFR 1020.40)
- Typical Radiation leakage is less than 0.1 mR/hr (Leakage less than 0.5 mR/hr permitted by the Federal Standard)

STANDARD FEATURES

- 6 Color Imaging
- 9 Quadrant Zoom
- Atomic Z-Number Measurement
- Auto Image Archiving (150,000)
- Baggage Counter
- Color and Black/ White Imaging
- Continuous Scanning
- Continuous Zoom up to 64x
- Vertical Zoom Panning
- Geometric Image Distortion Correction
- High Penetration Function
- Heavy Duty Roller Casters
- Image Annotation
- Image Review
- JPEG Conversion
- Material Discrimination
- Multi-Tier Accessibility
- Network Ready
- Organic/ Inorganic Imaging
- Operator Training Program (OTP)
- Picture Perfect
- Print Image Capable
- Pseudo Color
- Real-Time Image Manipulation
- Real-Time Self Diagnostics
- Reverse Monochrome
- Save Image (RGB)

OPTIONAL FEATURES[3]

- 24" LCD Monitor
- Custom Paint
- Density Alert
- Dual Monitors (19" or 24" LCD)
- Entry/ Exit Roller Tables (50 cm Increments)
- Footmat Operator Interlock
- Image Analysis Program (IAP)
- Image Analysis Program - LITE (IAP - LITE)
- Larger Heavy Duty Casters
- Local Language Support
- Polar Kit
- Radiation Meter
- Remote Workstation Configuration
- Screener Assist Software
- Sloped Conveyor
- Test Case
- Threat Image Protection (TIP) Software
- Tropical Kit
- Wireless Barcode Scanning

[1] As tested on Astrophysics Inc. Test Piece.
[2] Weight and dimensions of the system may vary depending on customization.
[3] Optional Features may affect lead time, price, and weight of XIS-5335. Please contact your Astrophysics Sales Representative for more information.
Due to continued product research and development, Astrophysics Inc. reserves the right to amend all technical specifications without prior notice.

21481 Ferrero Parkway • City of Industry • California 91789 USA
[P] 909.598.5488 • [F] 909.598.5546 • [E] sales@astrophysicsinc.com • www.astrophysicsinc.com

P/N: 50-00-PB04-00 Rev.G